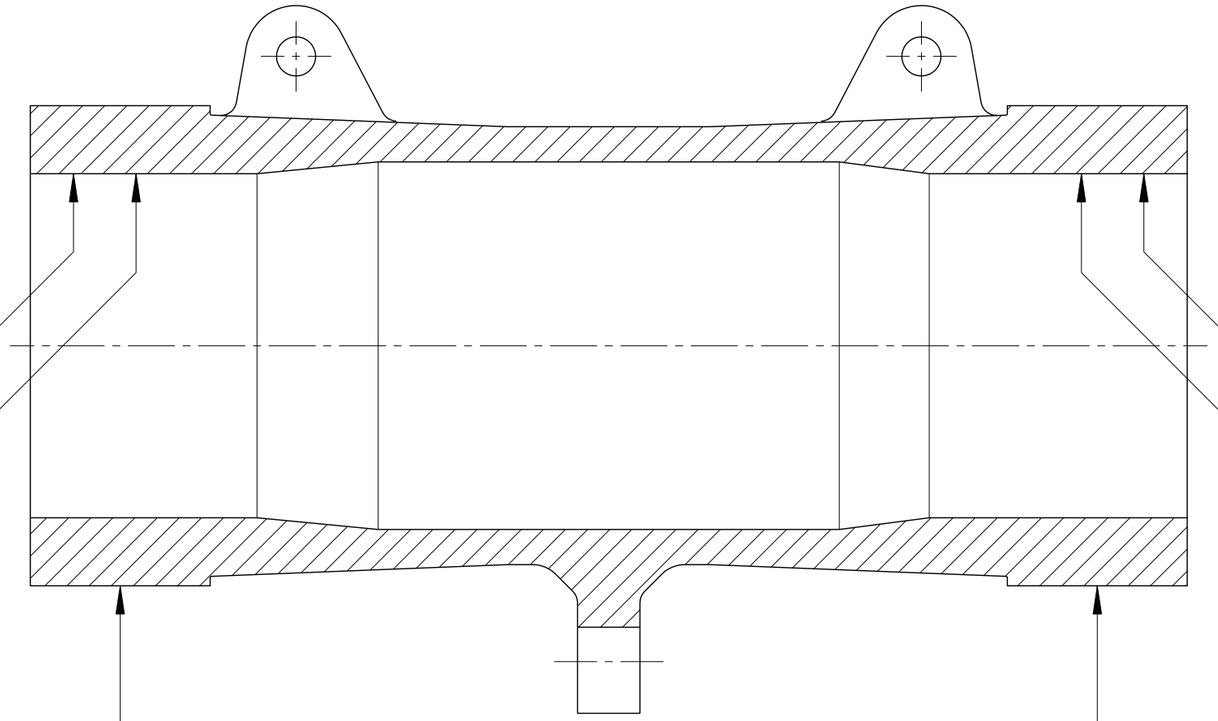

BEARING DIAMETERS

SPECIFIED
DIAMETER AT 0°
DIAMETER AT 90°
OVER / UNDER TOLERANCE

DIAMETERS

BEARING DIAMETERS

SPECIFIED
DIAMETER AT 0°
DIAMETER AT 90°
OVER / UNDER TOLERANCE

DIAMETER RUNOUTS

BEARING RUNOUTS

REPAIR ORDER NUMBER

REFERENCE DRAWINGS	REV	DATE	REVISION	DRN	CKD	APP
	A	20.01.2009	ISSUED FOR CHECKING AND APPROVAL	CMH		

COPYRIGHT ©
This drawing is the property of the Owners of Tiwest Pty Ltd and may not be reproduced or imparted to a third party without prior written permission. Tiwest Pty Ltd manages and operates the Tiwest Joint Venture between Tronox Western Australia Pty Ltd (a subsidiary of Tronox Incorporated) and subsidiaries of Exxaro Australia Sands Pty Ltd (a subsidiary of Exxaro Resources Limited) each with a several interest of 50%

TIWEST PTY LIMITED
A.C.N 009 343 364
WESTERN AUSTRALIA

PLANT GRID NORTH

OPERATIONS APP		
PROJECT APP		
DESIGN APP		
DESIGNED		
CHECKED		
DRAWN	C HUXTABLE (BY)	12.01.2009 (DATE)

LOCATION: X

TITLE: X X BEARING HOUSING SURVEY DIAGRAM

SCALE	DRG No		REV
-	XXX-X-XXX	A1	A